河南三博电子科技有限公司 电话：0371-55365505 传真：0371-86257077 邮箱：sales@hnsanbo.cn 网址：www.hnsanbo.cn

REVISIONS					
ZONE	LTR	2TC27 DESCRIPTION	PROJ. 1041	DATE	APPROVED
	R	SEE ECN	ECN0017504 PAF	8-19-04	D.A.

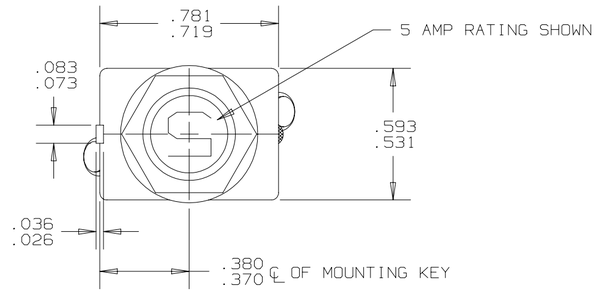

NOTES:
1. EPOXY SURFACES ARE NON-DIMENSIONED. ENVELOPE DIMENSIONS DO NOT APPLY TO THESE PROJECTED EPOXY SURFACES.
2. TERMINAL AND MOUNTING HARDWARE MAY BE PACKAGED RATHER THAN INSTALLED.
3. COUNTRY OF ORIGIN IS SHOWN FOR ILLUSTRATION PURPOSES ONLY. COUNTRY OF ORIGIN TO BE IDENTIFIED AS REQUIRED.
4. DATE CODE PER 10588-285.
5. MARK IN APPROXIMATE POSITION SHOWN IN BLACK INK PER 12506-70.

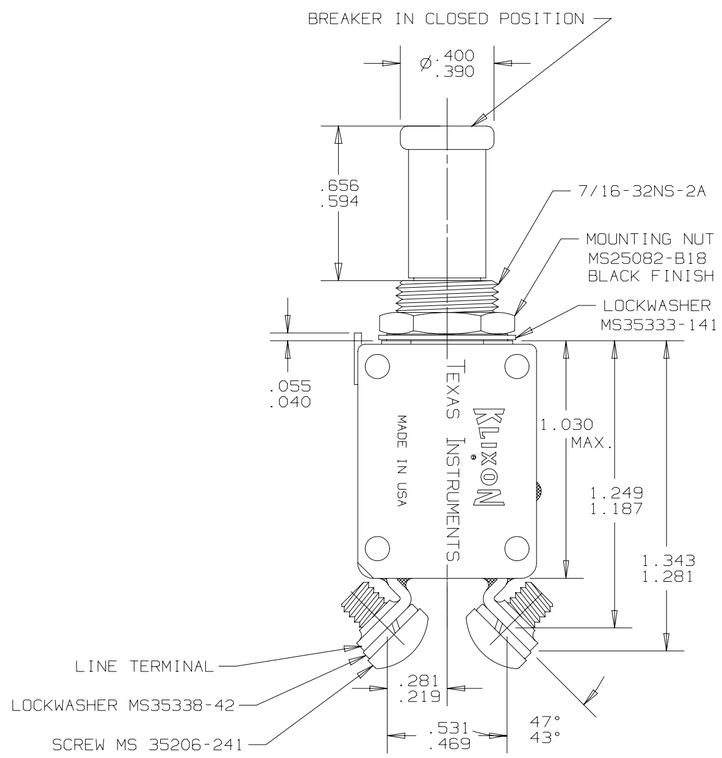

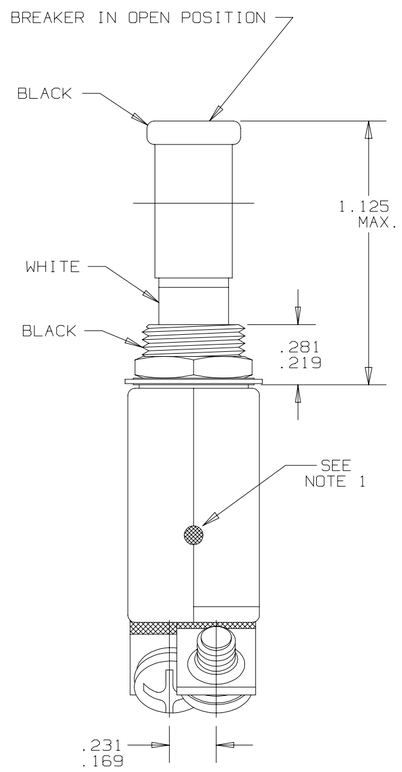

PERFORMANCE CHARACTERISTICS

DETAIL PERFORMANCE PER MIL-C-5809

OVERLOAD CYCLING	100 CYCLES AT 200% RATING
VIBRATION	10 G'S MINIMUM 50-500 HZ
MECHANICAL SHOCK	50 G'S
ACCELERATION	10 G'S
SAND AND DUST	12 HOURS
CORROSION	SALT SPRAY 50 HOURS
HUMIDITY	10 DAYS
EXPLOSION PROOF	WHILE INTERRUPTING RUPTURE CURRENTS

ENDURANCE:

120 VAC	400 HZ INDUCTIVE	2500 CYCLES
	400 HZ RESISTIVE	5000 CYCLES
30 VDC	INDUCTIVE	2500 CYCLES
	RESISTIVE	5000 CYCLES
MECHANICAL	NO LOAD	10000 CYCLES

CALIBRATION: 1 AMP THRU 25 AMP

	MIN. ULT. TRIP	MAX. ULT. TRIP	200%	500%	1000%
+25°C, +77°F	115% RATING	138% RATING	5-20 SEC.	.5-2.0 SEC.	.12-.53 SEC.
-55°C, -65°F	115% RATING	160% RATING	7-40 SEC.	.6-3.0 SEC.	.16-.8 SEC.
+121°C, +250°F	100% RATING	138% RATING	3-13 SEC.	.33-1.1 SEC.	.07-.3 SEC.

RUPTURE:

1 AMP	120 VAC, 400 CPS	3500 AMPS
2 AND 2 1/2 AMP	120 VAC, 400 CPS	2800 AMPS
3 THRU 15 AMP	120 VAC, 400 CPS	2500 AMPS
20 AMP	120 VAC, 400 CPS	2000 AMPS
1 THRU 20 AMP	28 VDC	6000 AMPS
25 AMP	28 VDC	1625 AMPS
25 AMP	120 VAC, 400 CPS	1800 AMPS

MAXIMUM OPERATING FORCES

PULL OUT	5 LBS. MAX. (22.2 N)
RESET	5 LBS. MAX. (22.2 N)

OPERATING ALTITUDE: 70,000 FT. (21,000 M)

WEIGHT: 25.0 GRAMS MAX.

VOLTAGE DROP:

1 AMP	1.10 VOLTS MAX.
2 AMP	0.70 VOLTS MAX.
2.5 AMP	0.50 VOLTS MAX.
3 AMP	0.40 VOLTS MAX.
4 AMP	0.37 VOLTS MAX.
5 AMP	0.35 VOLTS MAX.
7.5 AMP	0.30 VOLTS MAX.
10 AMP	0.28 VOLTS MAX.
15 AMP	0.25 VOLTS MAX.
20 AMP	0.25 VOLTS MAX.
25 AMP	0.20 VOLTS MAX.

T.I. PART NO.	MS PART NO.
2TC27-25	N/A
2TC27-20	MS 3320-20L
2TC27-15	MS 3320-15L
2TC27-10	MS 3320-10L
2TC27-7 1/2	MS 3320-7 1/2L
2TC27-5	MS 3320-5L
2TC27-4	MS 3320-4L
2TC27-3	MS 3320-3L
2TC27-2 1/2	MS 3320-2 1/2L
2TC27-2	MS 3320-2L
2TC27-1	MS 3320-1L

MARKING TABLE

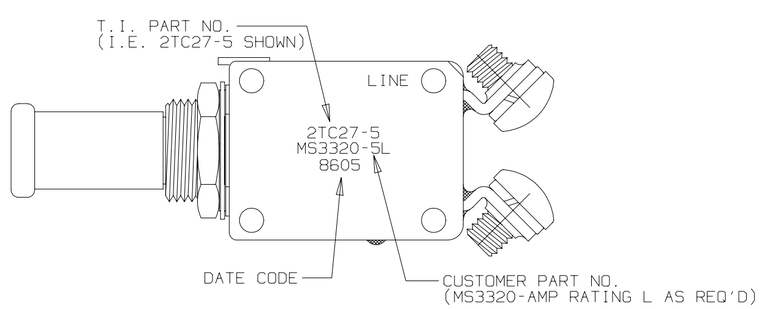

MARKING
(SEE TABLE)

THIS IS A CAD DRAWING. THE GEOMETRY IN THE ASSOCIATED CAD COMPUTER FILE IS DIMENSIONALLY ACCURATE. WHEN DRAWING IS BEING REVISED, THE GEOMETRY MUST BE UPDATED IN ALL VIEWS AND ON ALL SHEETS.

UNLESS OTHERWISE SPECIFIED DIMENSIONS ARE IN INCHES	DRAWN TOM DAIL	DATE 10-30-89	TEXAS INSTRUMENTS ATTLEBORO, MASSACHUSETTS 02703 — KLIXON CONTROL PRODUCTS DIVISION
TOLERANCE ON FRACTIONS DECIMALS ANGLES	ENGINEER JACQUES CHAMMAS	12-4-89	TITLE PART NO. 2TC27 AMBIENT COMPENSATED, HIGH TEMP. CIRCUIT BREAKER PUSH-PULL, TRIP FREE ENVELOPE DRAWING
	APPROVED		
	APPROVED		
MATERIAL			SIZE C — CODE IDENT NO. 82647 — 2TC27 SH1
	SIGNATURES ON FILE. REFER TO ELECTRONIC CHANGE NOTICE.		SCALE: 4X — SHEET 1 OF 1

河南三博电子科技有限公司 电话：0371-55365505 传真：0371-86257077 邮箱：sales@hnsanbo.cn 网址：www.hnsanbo.cn